APPROVED BY:

NOTE: UNLOADED HEIGHTS MAY BE 4" ABOVE HEIGHTS SHOWN

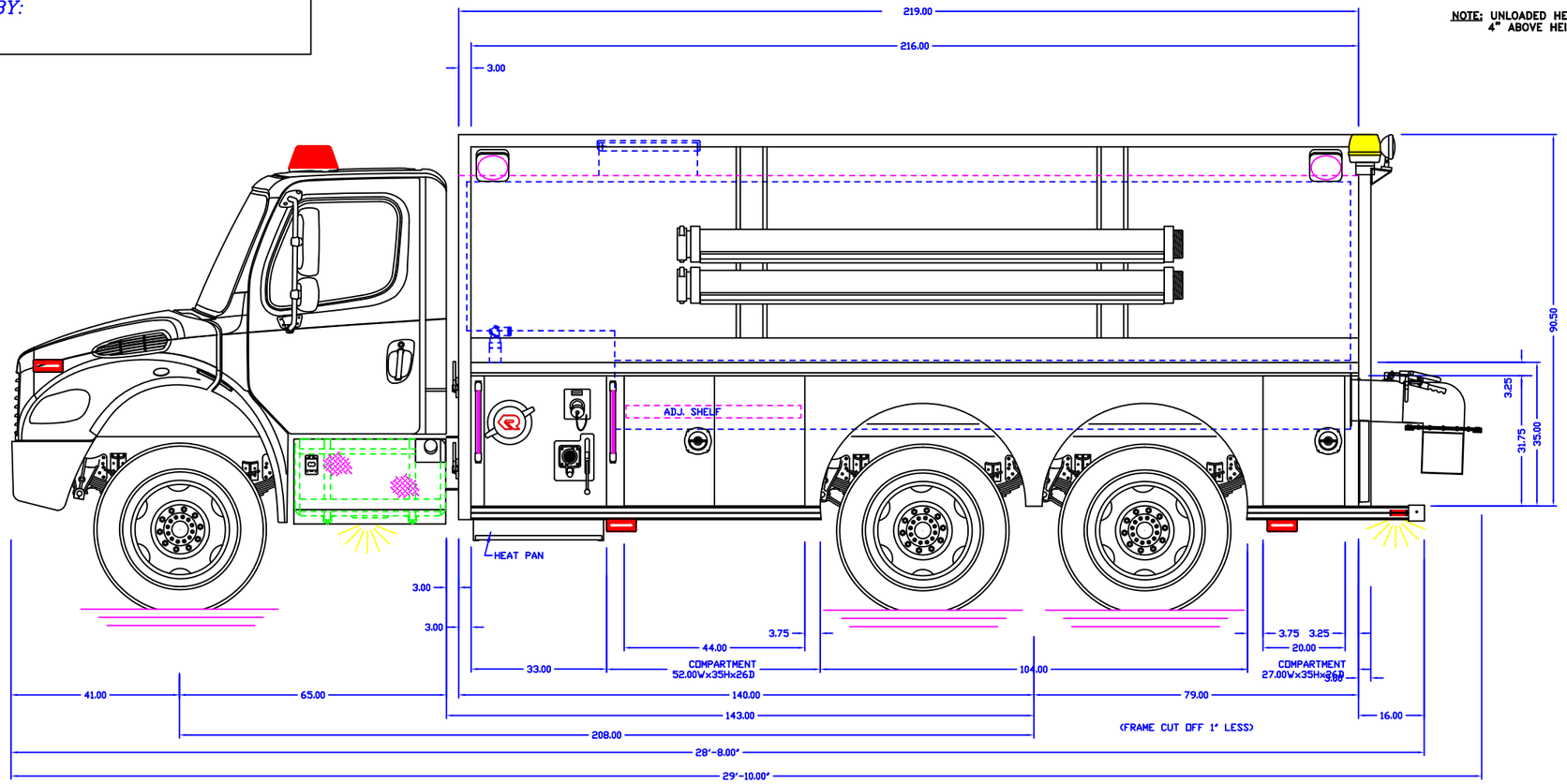

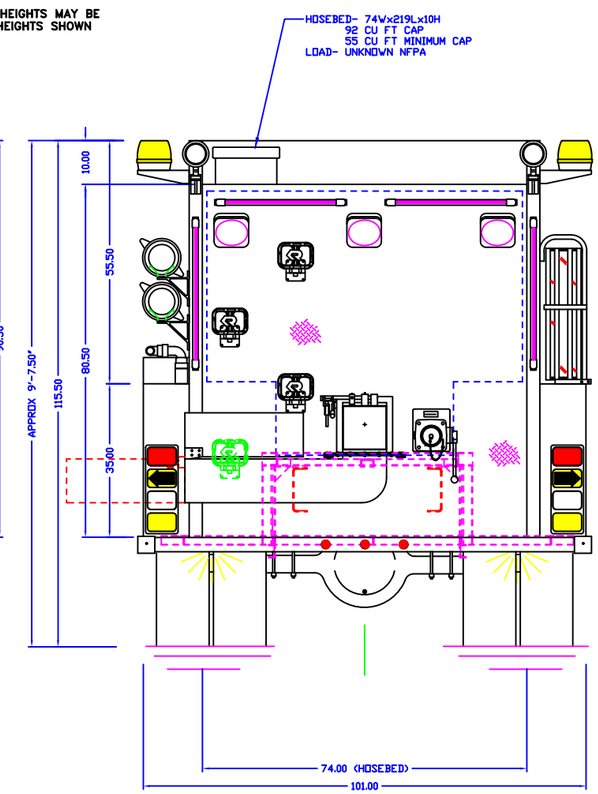

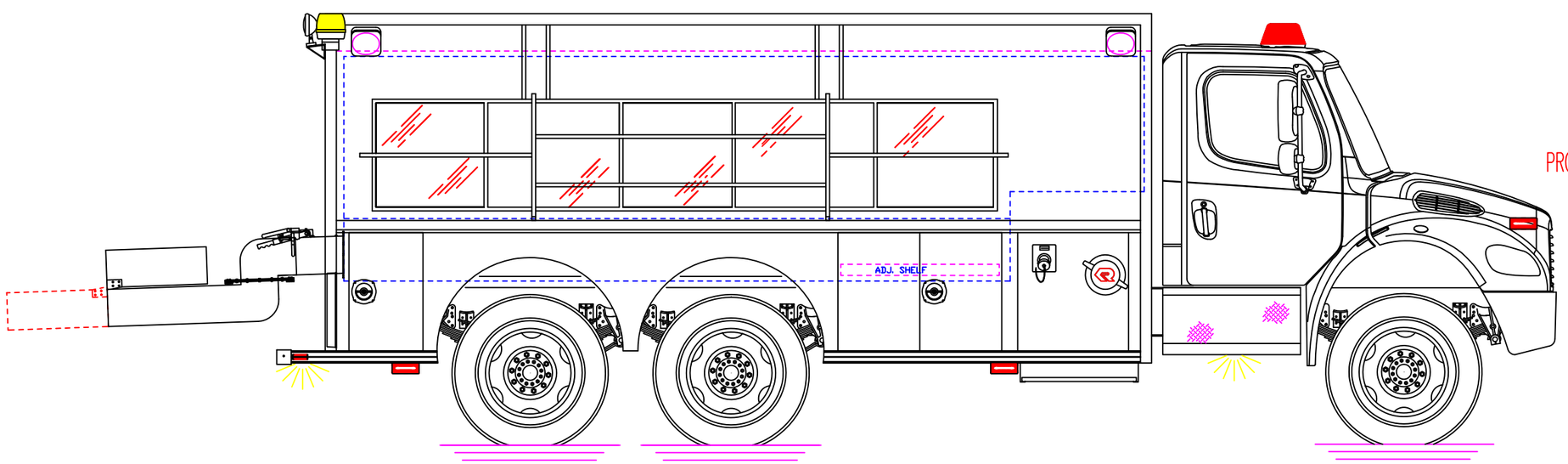

NOTE: TANK CAP- 3000 GAL POLYPROPYLENE

PUMP CAP- 500 GPM DARLEY

DIMENSIONS SHOWN ARE APPROXIMATE AND ARE SUBJECT TO MINOR DEVIATIONS DURING CONSTRUCTION

NOT ALL ITEMS IN SPECS ARE SHOWN ON THIS PRINT

SPOT LIGHT- 2 ON REAR

COMPARTMENT INTERIORS NATURAL

SIDE PUMP PANELS BLACK THERMOPLASTIC

NFPA UPPER LIGHT PACKAGE- WHELEN
NFPA LOWER LIGHT PACKAGE- WHELEN

ROLL UP DOOR EFFECTIVE OPENING- 3" NARROWER AND 5" SHORTER THAN ACTUAL OPENING IN BODY

OK FOR PRODUCTION
INTIALS: JW
JOB NUMBER: 2786
DATE: 12/03/08

MAIN FILE:
DEPT:
DEALER:

PRODUCTION APPROVED

11'	MAXIMUM HEIGHT	BFTN WLM	BFTN MMA	BFTN
30'	MAXIMUM LENGTH	DATE: 11-12-08	DATE: 12-03-08	REVISED
95"	BODY WIDTH	CENTRAL		

rosenbauer

CALHAN FD, CO

0 12" 24" SCALE: REF. ONLY

DRAWING NUMBER
calhan, co