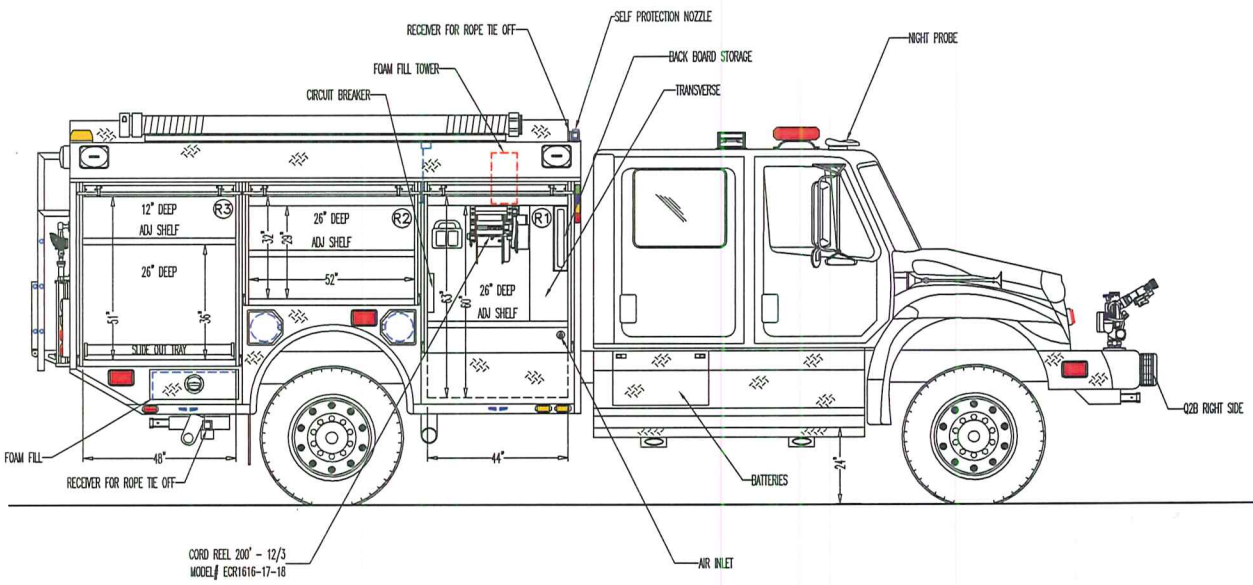

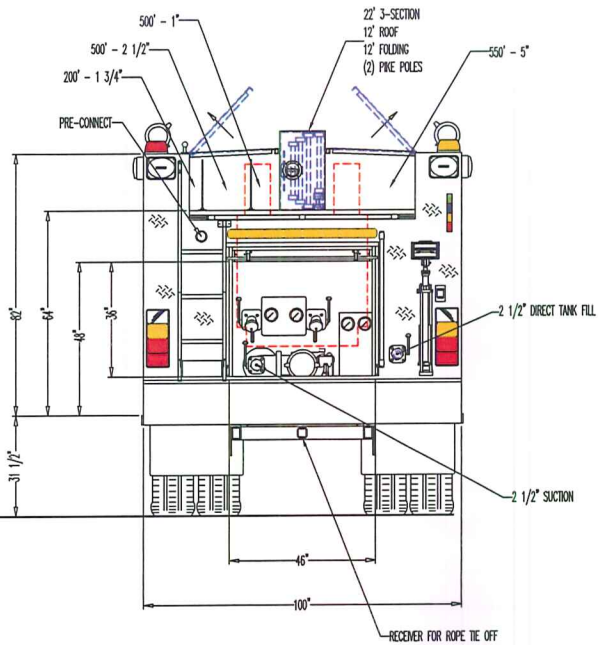

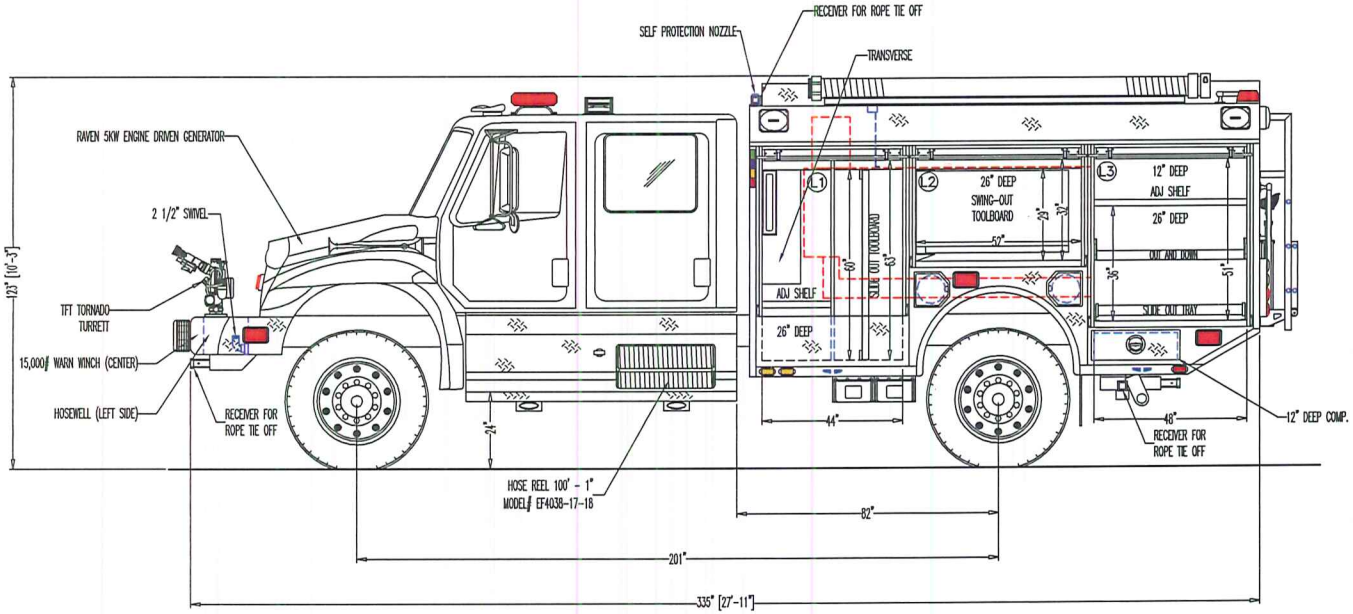

rosenbauer

DO NOT SCALE DRAWING. ALL DIMENSIONS ARE APPROXIMATE AND SUBJECT TO ENGINEERING CHANGES DUE TO CHASSIS VARIATIONS. BLUEPRINT DOES NOT NECESSARILY SHOW ALL ITEMS IN THE SPECIFICATIONS.

GREATER EAGLE FIRE PROTECTION DISTRICT

NOTES:
OVERALL HEIGHT IS IN LOADED CONDITION

GENERAL DIVISION		DWG# P3923-07
REV:	DRAWN: 10-27-2009	CHASSIS: INTERNATIONAL 7400 4DR 4X4
	DRAWN BY: JRL	BODY MAT'L: ALUMINUM
	VEHICLE TYPE: TIMBERWOLF	SUBFRAME MAT'L: ALUMINUM
	FILE #: 3168	TANK MAT'L/GALS: POLY/500/30(FOAM)
	SCALE: DNS	WEIGHT FRONT:
	PUMP: ROSENBAUER NH40 1000 GPM	WEIGHT REAR: